CP160CR-**CP**180CR

SITEX

Constant Potential Crawler Units

Deploying the cutting-edge technology of our constant potential portable X-ray generator into the best X-ray crawler tube ever designed.

KEY FEATURES

- Lightweight
- Compact: ∅120 x 688 mm
- 6” Pipe ready
- Constant Potential
- Reduced exposure time
- CPRCU: independent pocketsize Remote Control Unit
- 100% working cycle at 30°C

UNEQUALED WEIGHT TO PERFORMANCE RATIO

Without any compromise on the performance, The **CP**160CR and **CP**180CR are, with an outside diameter of 120 mm, a length of just 688 mm and a weight of less than 10 kg, the most compact portable x-ray generators available on the market for crawler. Offering an output range from 40 to 160 kV (180 kV for the **CP**180CR)/ 0.5 to 2 mA, this crawler X-ray generator fits perfectly to inspect pipelines starting from 6 inches.

CONSTANT POTENTIAL

The constant potential X-ray output of the **CP**160CR and **CP**180CR generators allows reducing drastically (an average factor of 2 can be considered) the exposure time to penetrate an equivalent thickness of steel. 22 mm of steel in 25 seconds for a 6’’ pipe or 28 mm of steel in 10 minutes for a 18” pipe (AA400, D=2) are results you will achieve with the 160 kV generator. It means quicker results, lower power consumption by inspection and by consequence more controls with the same battery charge.

LIGHT AND USER-FRIENDLY REMOTE CONTROL UNIT

ICM crawler generators are equipped with a complete removable control unit, including LCD display and keypad. This pocket size Remote Control Unit, the **CP**RCU, provides the operator the necessary user-friendly interface to program the crawler tube. As soon as the preheating is completed and the kVs and mAs are keyed in, the remote control unit is disconnected and the crawler is ready to go.

Exposure chart for CP160CR / **CP**180CR

(Steel -D=2.0 -FFD=84.15mm (6” pipe) -KODAK AA400)

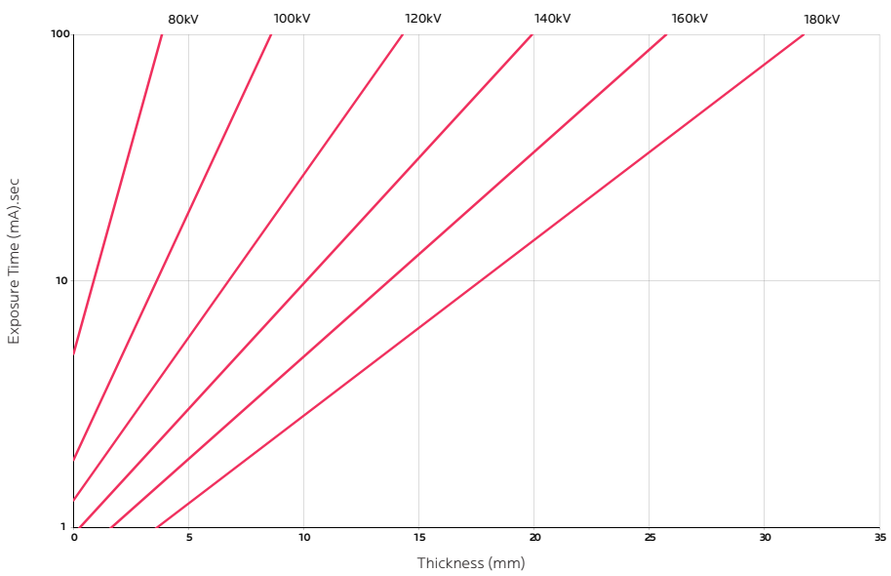

SITEX CP160CR-180CR technical specifications

CRAWLER	UNITS	CP160CR	CP180CR *Soon available*
Output voltage range	kV	40 to 160	40 to 180
Output voltage selection step	kV	1	1
Tube current range	mA	0.5 to 2	0.5 to 2
Tube current range @ full output	mA	2	2
Tube current selection step	mA	0.1	0.1
Max. power at the anode	W	320	360
Input voltage range	VDC	40 to 60	40 to 60
Input current at 48 VDC	A	9	10
kV and mA stability	%	< 0.5	< 0.5
Radiation geometry	-	True radial beam	True radial beam
Maximum useful angle of X-ray beam	(°)	360 x (2 x 20)	360 x (2 x 20)
Dimension of the optical focal spot	mm	Dia. 4 x 0.5	Dia. 4 x 0.5
Inherent filtration	mm	Equiv. 3.5 (Al)	Equiv. 3.5 (Al)
Working cycle at 30°C ambient temperature	%	100	100
Operating temperature range	°C	-30 to +60	-30 to +60
Storage temperature range	°C	-40 to +70	-40 to +70
SF6 insulation pressure at 20 °C	kg/cm2	5.5	5.5
Cooling fan supply voltage	VDC	40 to 60	40 to 60
Weatherproof level	-	IP65	IP65
Exposure time for max. wall thickness *(6" pipe / AA400/ D=2 / WT=22mm)*	sec	25	11
Steel penetration at max kV and mA *(18" pipe / AA400 /D=2 / T=10 min)*	mm Fe	28	35
Guard rings	-	Optional	Optional
Position of interconnection socket		Axial	Axial
Type of connector	-	MIL-DTL 26482 metallic circular	MIL-DTL 26482 metallic circular
Max. leakage dose at 1m at full output	mSv/h	< 2.0	< 2.0
Microcontroller HT measurement circuit (kV and mA)	-	Yes	Yes
Overall dimensions	mm	Dia. 120 x 688	Dia. 120 x 688
Total weight without guard rings	kg	9.9	9.9
Prewarning time	sec	3 to 59	3 to 59

CPRCU technical specifications

CPRCU	UNITS	CP160CR / CP180CR
GENERAL		
Microcontroller processor	-	8 bits – 11 MHz
Type of electronic components	-	Industrial series (-25°C to + 85 °C)
POWER SUPPLY		
Type of power supply	-	Provided by generator
MEASUREMENT & CONTROL		
kV and mA measurement accuracy	%	±0.5
Display of programmed parameters	-	Yes
kV, mA programming step	kV / mA	1 / 0.1
Semi-automatic preheating	-	Yes
Preheating time range	min	5 to 60 (1 min step)
Battery voltage control accuracy	%	±0.5
CONTROL & DISPLAY		
LCD display with variable contrast	Line x Char.	2 X 20
Polyester keypad	keys	14
General power on function	-	Provided by the crawler
START-STOP functions	-	Provided by the crawler
WEIGHT, DIMENSIONS, ENVIRON.		
Total weight	kg	0.28
Overall dimensions of CPRCU (W x H x D)	mm	211 x 100 x 26
Operating temperature range	°C	-20 to +70
Storage temperature range	°C	-40 to +85

Dimensions

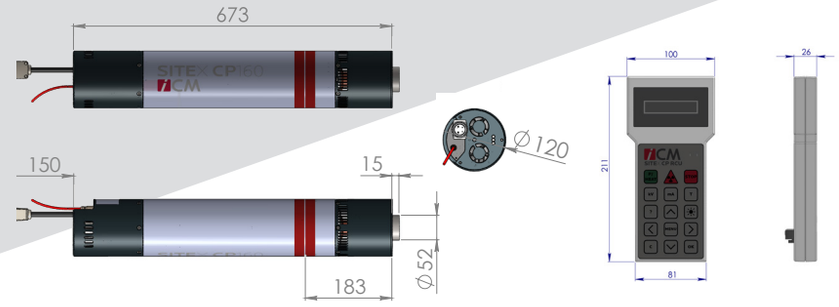

Zoning "Les Plenesses"
Rue du Progrès, 3
B-4821 Dison - Belgium

Tel: +32 (0) 87 / 440 150
Fax: +32 (0) 87 / 440 160
E-mail: sales@icmxray.com

www.**icmxray**.com/ndt

INDUSTRIAL CONTROL MACHINES S.A.